VERSION A

MATH 2250
FINAL EXAMINATION
Dec 11, 2014

Directions: You have 3 hours to complete 15 questions worth 200 total points. You may use only a TI30 calculator. If you use a calculator, give decimal answers correct to three (3) decimal places. No cell phones, laptops, tablets, books, or notes are allowed at or near your seat.

On all questions requiring calculation of any sort, you must show your algebra and calculus work in order to earn credit. You do not need to simplify expressions, although you may need to in order to complete the next steps of a problem.

Appended to the back of this exam is a questionnaire. Please provide this valuable input on text/platform selection. Thank you for your input.

My name written below confirms that I have read and understood the UGA Culture of Honesty. I will be academically honest in all of my academic work and will not tolerate academic dishonesty of others. I will complete this test in strict compliance with these policies.

Name: _____

Instructor's name: _____

Room/Seat Number: _____

#	Score	Points
1		12
2		15
3		15
4		10
5		14
6		10
7		15
8		15
9		18
10		15
11		10
12		16
13		10
14		10
15		15
Total		200

(1) (12 points) Compute the following limits. On parts a,b,c you MUST show work to earn credit.

(a) $\lim_{x \to 2} \dfrac{x^2 + x - 6}{x - 2}$

(b) $\lim_{x \to 0} \dfrac{e^x - e^{-x}}{\sin x}$

(c) $\lim_{x \to 0} \dfrac{x}{\tan 5x}$

(d) $\lim_{x \to \infty} \dfrac{3x^3 - 4x^2 + 7\sqrt{x} + 9}{8x^3 + x^2 + 2x}$

(2) (15 points) Compute $\frac{dy}{dx}$ for each of the following functions:

(a) $y = 3x^2 + 2x + 1$

(b) $y = \frac{\ln x}{\tan x}$

(c) $y = \tan^{-1}(\sqrt{x})$

(d) $y = \cos^3(e^{5x})$

(e) $y = (\sin x)^x$

(3) (15 points)

(a) Find the average rate of change of the function

$$f(x) = \sqrt{3x+1}$$

between $x = 1$ and $x = 5$.

(b) Use the **definition** of the derivative to compute $f'(x)$, where $f(x)$ is as in part a) above.

(c) Find the point c in the interval $[1, 5]$ where $f'(c)$ equals the average rate computed in part a).

(4) (10 points) In each part of this problem, x and y satisfy $x^2 - xy + y^2 = 9$.

(a) Find $\dfrac{dy}{dx}$ when $(x, y) = (0, 3)$.

(b) Find all points where the tangent line is horizontal.

(5) (14 points) A certain function $f(x)$ satisfies

$$f(7) = 3$$
$$f'(7) = -5$$
$$f''(7) = 10$$

(a) Use linear approximation to estimate the value $f(6.9)$.

(b) Would you expect your answer to overestimate or underestimate the true value? Explain.

(6) (10 points) Work out the following integrals using any technique that you like.

(a) $\displaystyle\int \frac{x}{x^2+1}\,dx$

(b) $\displaystyle\int \sqrt{7x-2}\,dx$

(7) (15 points) Consider a right triangle lying in the first quadrant of the coordinate plane, with base on the x-axis and hypotenuse extending from the origin to a point on the curve

$$y = 4 - x^2.$$

What is the largest possible area of such a triangle? What are the lengths of the legs of the triangle that realizes this area?

Be sure to write a summary sentence, providing justification that you've solved the problem.

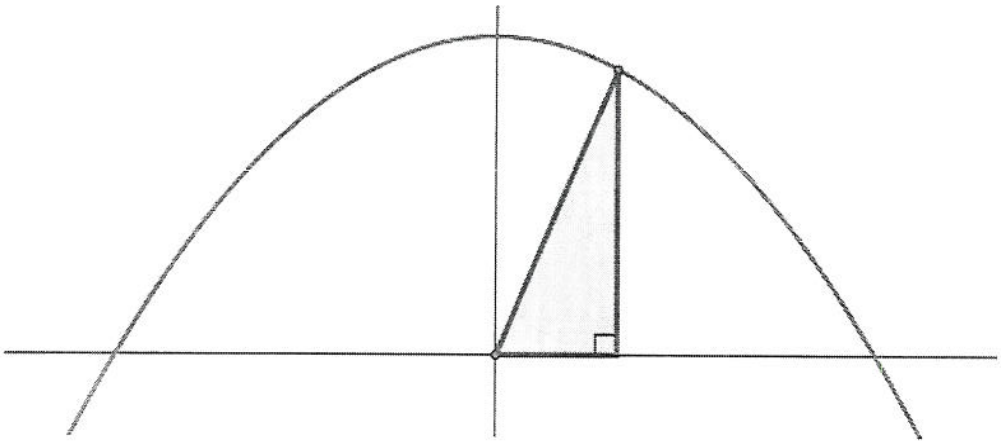

(8) (15 points) A 20 foot rope is tied to the back of a boat. It is then stretched over the edge of a 5 foot high dock and tied to the ankle of an elephant who happens to be standing on the dock (see figure below). If the boat moves away from the dock at 10 ft/sec how fast is the elephant dragged when the boat is 12 feet from the base of the dock?

Be sure to write a summary sentence, answering the question with correct units.

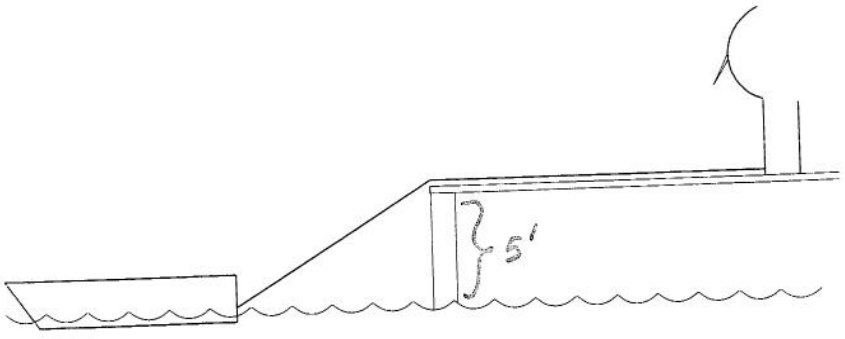

(9) (18 points) Suppose we know the following facts about an unknown function $f(x)$ with domain all real numbers:

$$\lim_{x\to-\infty} f(x) = -\infty \qquad \lim_{x\to+\infty} f(x) = +\infty$$
$$f(0) = 7 \quad \text{and } f'(0) = 0$$
$$f(2) = 1 \quad \text{and } f'(2) = 0$$

$$f'(x) > 0 \text{ for } x < 0, \quad x > 2$$
$$f'(x) < 0 \text{ for } 0 < x < 2,$$
$$f''(x) < 0 \text{ for } x < 1$$
$$f''(x) > 0 \text{ for } x > 1$$

Find

(a) The interval(s) where f is increasing,

(b) the x-coordinate(s) where f has a local maximum,

(c) the x-coordinate(s) where f has a local minimum,

(d) the interval(s) where f is concave up,

(e) Using your answers to a)–d), draw a rough sketch of the graph of f on the axes provided below.

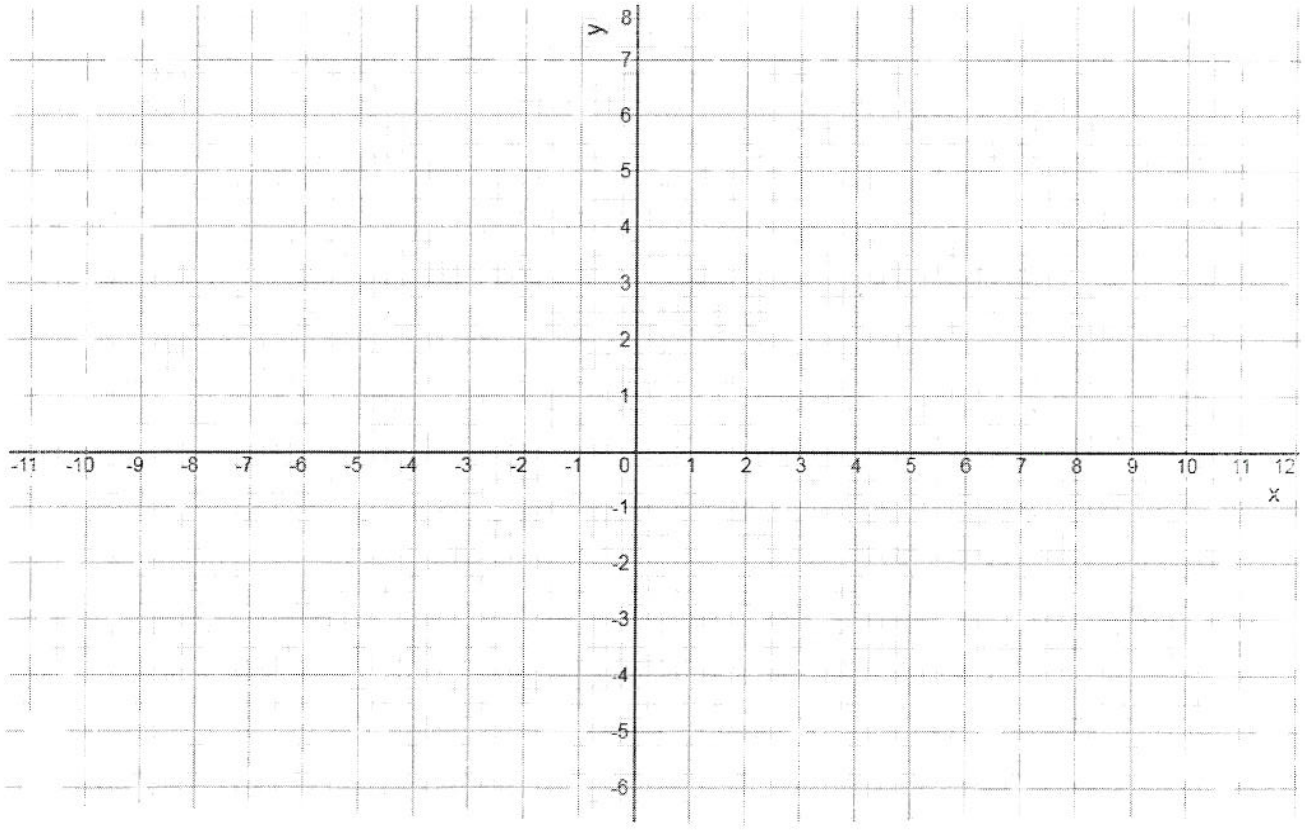

(10) (15 points) For its annual holiday party the Mathematics Department wishes to construct a frame for a conical holiday tree. The frame of the tree consists of a circular floor and a vertical central pole extending from the floor to the apex of the tent. The conical cavity will be filled with 9 cubic yards of flame-resistant stuffing. The floor costs \$2 per square yard, and the pole costs \$6 per yard.

What are the dimensions (radius of the floor and height of the pole) of the least expensive frame possible?

Be sure to write a summary sentence including dimensions and cost, providing justification that you've solved the problem.

The volume of a cone of height h and base radius r is $V = \frac{1}{3}\pi r^2 h$.

(11) (10 points)

(a) Evaluate $\int_0^2 x^2 + 1\, dx$.

(b) On the graph of $y = x^2 + 1$ below, sketch in *four midpoint* rectangles to approximate the value you computed in part a.

(c) Now compute your area estimate using the four midpoint rectangles.

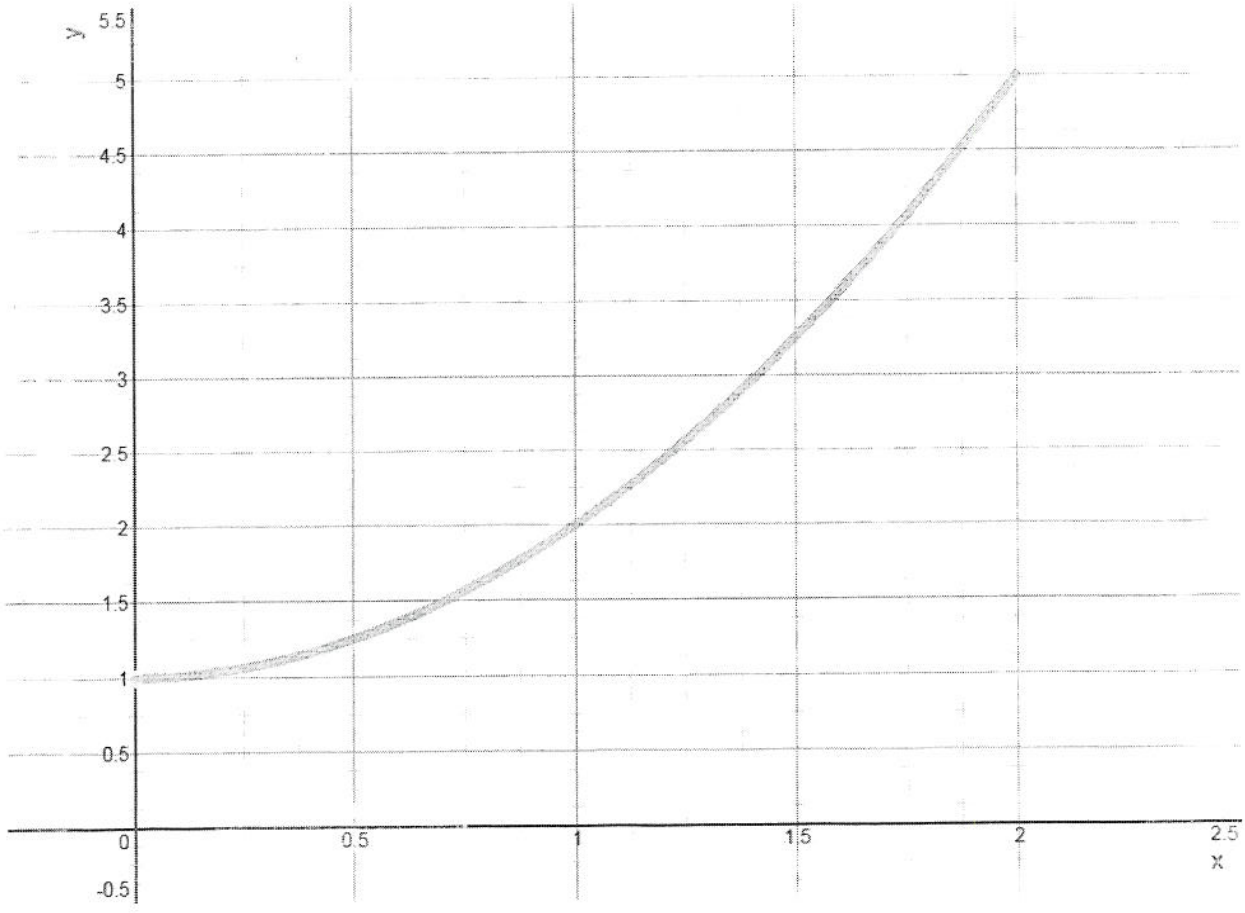

(12) (16 points)

a) State both parts of the Fundamental Theorem of Calculus.

b) Compute $F'(x)$, where the function $F(x)$ is defined by

$$F(x) = \int_0^{\cos x} e^{\sqrt{t}}\, dt$$

(13) (10 points) Find the average value of $f(x) = x^3$ on the interval $[0, 3]$.